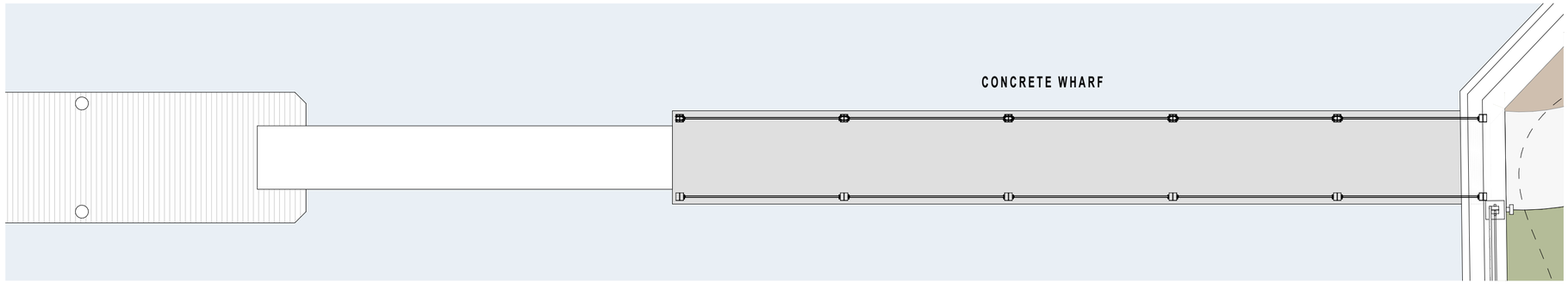

2 Wharf Plan
SCALE 1:100

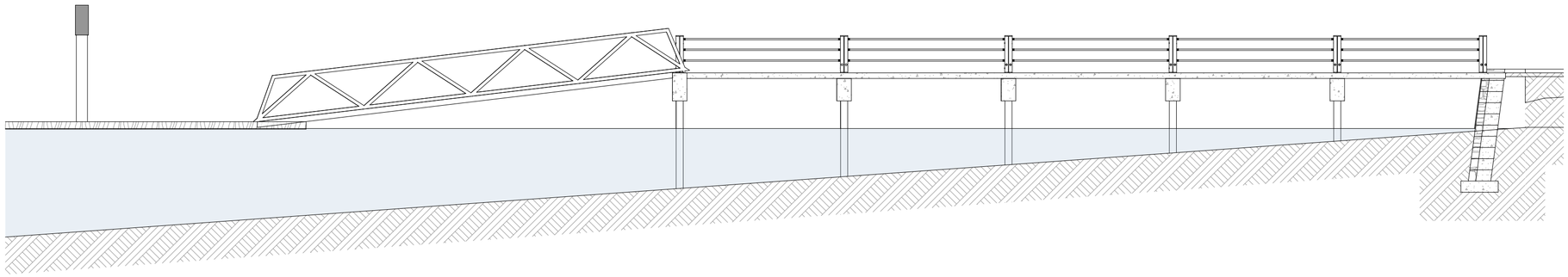

1 Wharf Section
SCALE 1:100

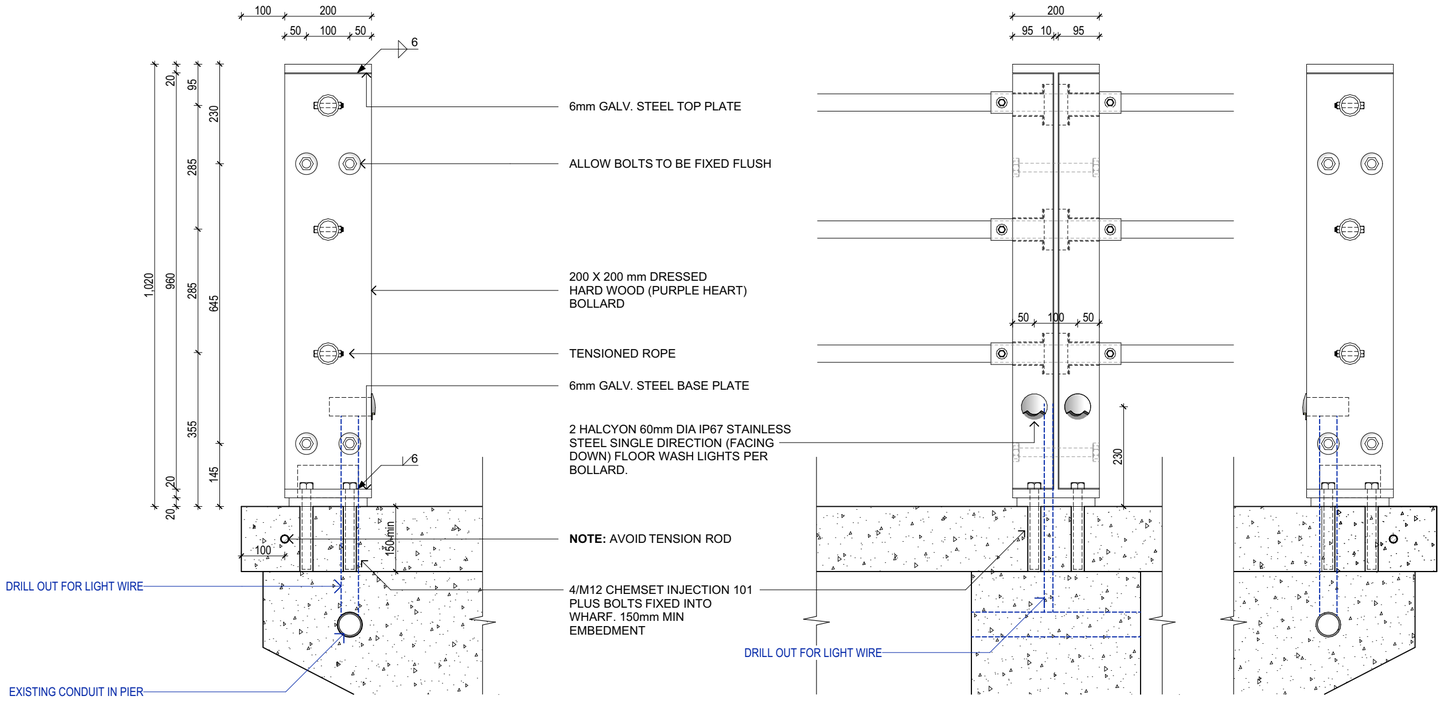

3 WHARF BOULARD DETAIL
SCALE 1:10

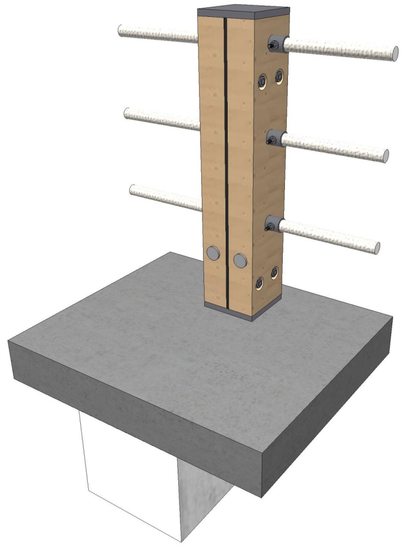

C BOLLARD VIEW 2
SCALE 1:500

+ MAP

KINGFISH LODGE

WHANGAROA HARBOUR

LODGE

PROJECT CONTROL GROUP
CLIENT - MIKE SULIIVAN

CONSULTANTS
STRUCTURAL & CIVIL ENGINEER - DHC
FIRE ENGINEER - HOLMES
ELECTRICAL ENGINEER - ELECCOM
MECHCANICAL ENGINEER - CHILLTECH

CONTRACT TEAM
MAIN CONTRACTOR - CLEAR WATER CONSTRUCTION

DETAILS	DATE	REV
FOR COORDINATION	23/09/2022	A

FOR COORDINATION
NOT TO BE USED UNTIL ENDORSED FOR BUILDING CONSENT

WHARF BOLLARDS

SCALE :	1:100, 1:10 @ A2
DATE :	23/09/2022
PROJECT No:	9567

SK.21 rev A

+MAP Architects (2016) Ltd.
131 Victoria Street
PO Box 667
CHRISTRCHURCH
New Zealand
p: +64 3 962 6530
f: +64 3 962 6541
office@maparchitects.co.nz
www.maparchitects.co.nz

DO NOT SCALE DRAWING. CONTRACTOR TO VERIFY ALL DIMENSIONS PRIOR TO COMMENCING WORK